Coal IGCC for Hydrogen Production, CO_2 Recovery and Electricity

Review for the

Aspen Global Climate Change Institute

July 23rd, 2000

by Richard D. Doctor, John Molburg,

Norman F. Brockmeier,

and Prakash Thimmapuram

Project team:

Richard D. Doctor

John C. Molburg

Norm F. Brockmeier

Prakash R. Thimmapuram

Argonne National Laboratory

Argonne, Illinois

IGCC full-energy cycle analysis

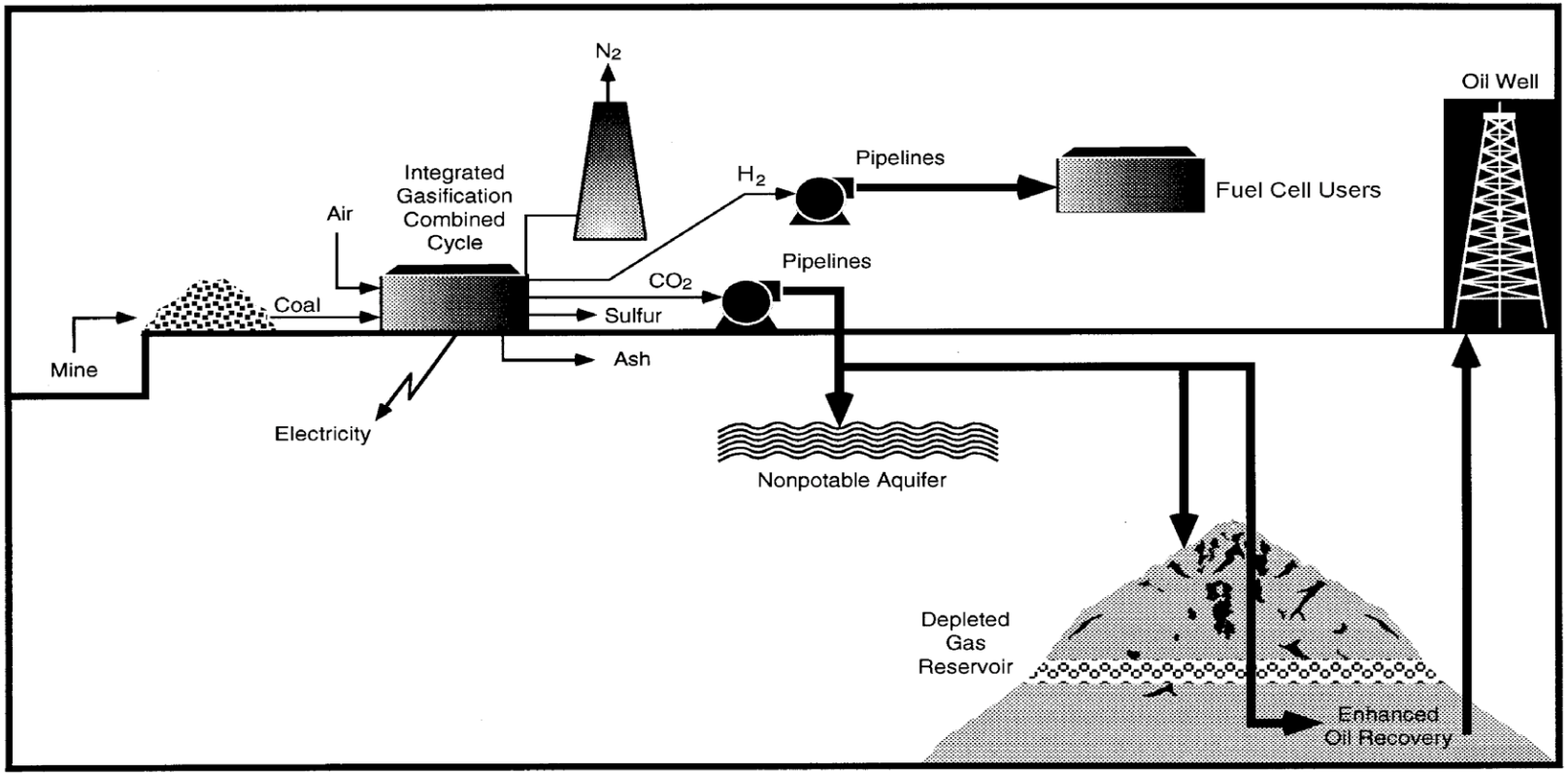

FIGURE S.2 Energy System Components for CO_2 Recovery

IGCC - Study Basis

- Both the Shell and Texaco entrained gasifier systems are under consideration.
- Shift willl need to be integrated into the process design which will be modified to produce H_2, recover CO_2, and produce electricity
- A full-energy cycle analysis will be developed based on an Aspen7 simulation of plant with a special focus shift, sulfur, CO_2 recovery, PSA for hydrogen, and power generation
- Feed will be Illinois #6 coal
- High purity H_2 sent 100 km by pipeline
- Supercritical-CO_2 sent 500 km by pipeline

IGCC - Study Basis

- Linkage to SAIC for LC Advantage – Victor Gorokhov and Masood Ramezan

Power use in deep-mining Illinois #6 coal

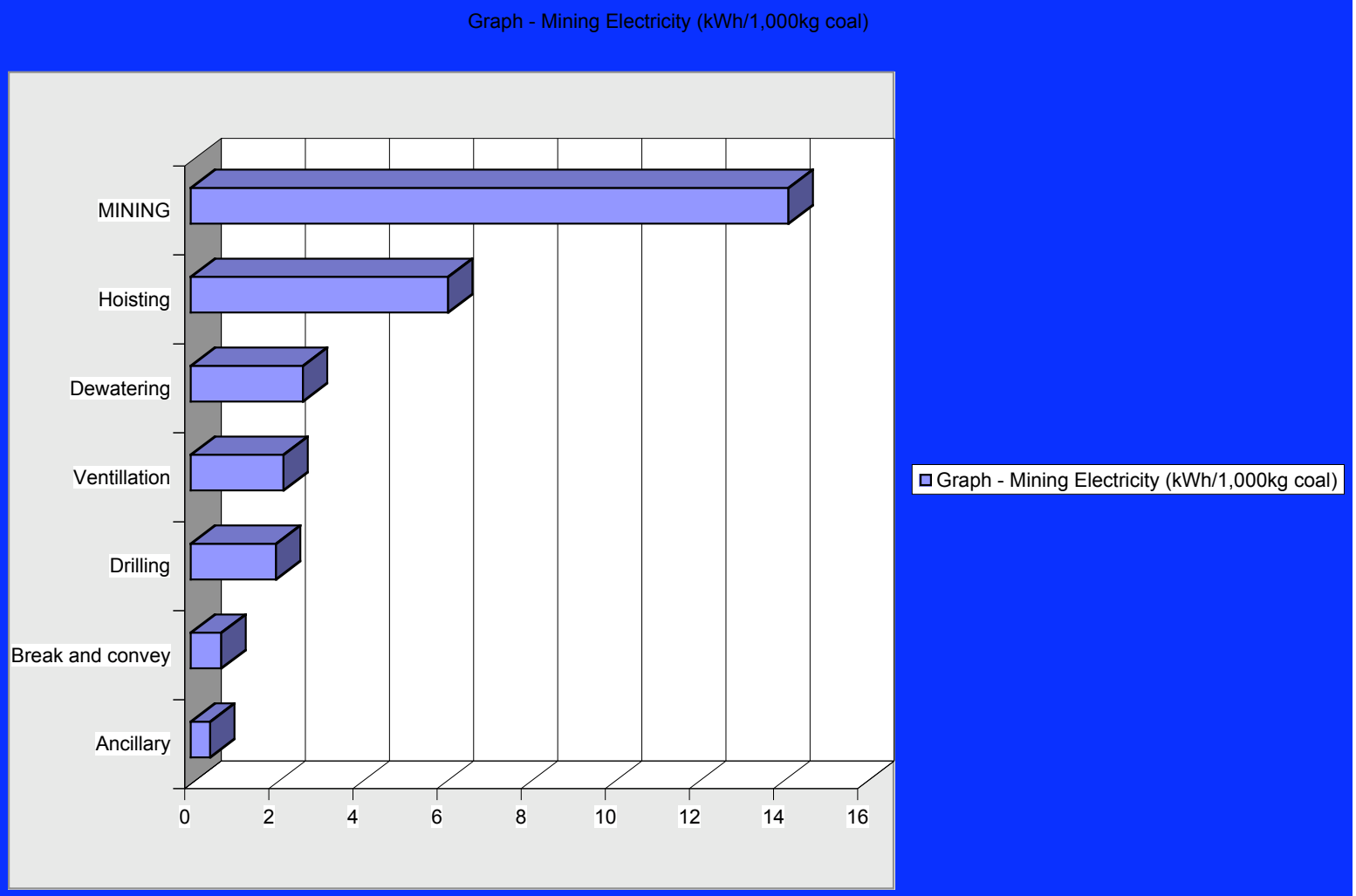

Coal methane emission importance

Bryant, E., Climate Process and change, Cambridge (1997) p.119

	Concentration ppm in 1994		Warming %	Life years
CO_2	356.000	1	63.8	55
CH_4	1.725	56	19.2	14
N_2O	0.311	280	5.7	120

Diesel-rail fuel efficiency changes with grades and curves

Stodolsky, F., et al., 3rd Total Life-cycle Conf., Graz, Austria (Dec. 1998)

Setting	Duration (h)	Distance Traveled, km (mi)	Fuel Consumed, with Grade Assump., L (gal)	Fuel Efficiency, T-km/L (t-mi/gal)
Dynamic brake at 19 km/h (12 mph) (down grade)	0.125	2.4 (1.5)	11 (3)	791 (2050)
Idle	0.38	0 (0)	8 (2)	0 (0)
Notch 1	0.065	0.97 (0.6)	8 (2)	475 (1230)
Notch 2	0.065	1.6 (1.0)	15 (4)	395 (1025)
Notch 3	0.052	2.4 (1.5)	26 (7)	341 (879)
Notch 4	0.044	2.6 (1.6)	34 (9)	261 (729)
Notch 5	0.038	2.6 (1.6)	42 (11)	98 (254)
Notch 6	0.039	3.2 (2.0)	57 (15)	211 (547)
Notch 7	0.03	2.7 (1.7)	53 (14)	192 (498)
Notch 8 at 35 km/h (22 mph) (up grade)	0.068	2.4 (1.5)	72 (19)	125 (324)
Notch 8 at 101 km/h (63 mph)	0.094	9.5 (5.9)	276 (73)	128 (331)
Total	1	30.4 (18.9)	602 (159)	188 (487)
Accessory loads			13 (3.5)	

Greenhouse gas emissions before Gasification plant

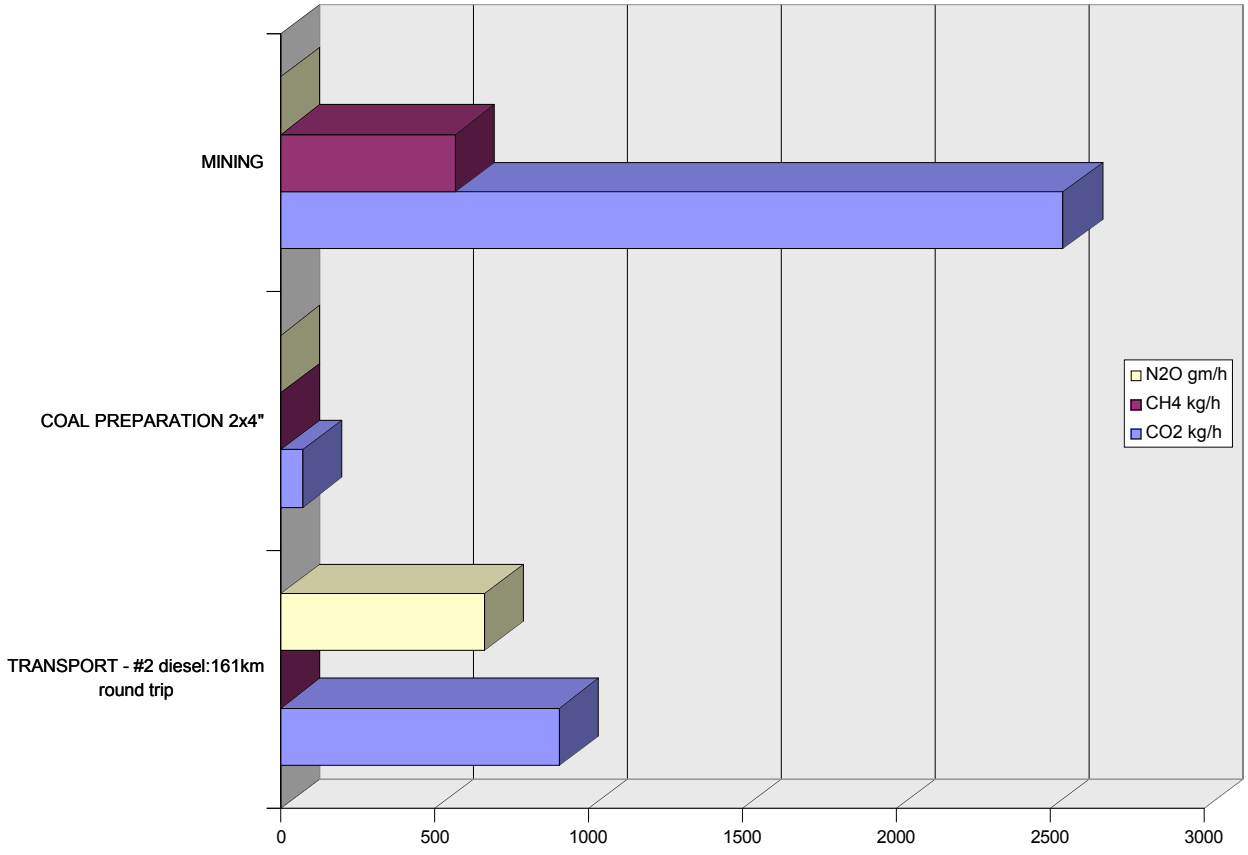

Conclusions: Mining & transport

- Coal bed methane is an important uncontrolled emission
- Diesel rail transport emissions of N_2O are less than 10% of typical values for Illinois
- Regulations for diesel fuel are reducing sulfur - hence N_2O from diesel should be lower in the future

IGCC with CO_2 and H_2 recovery

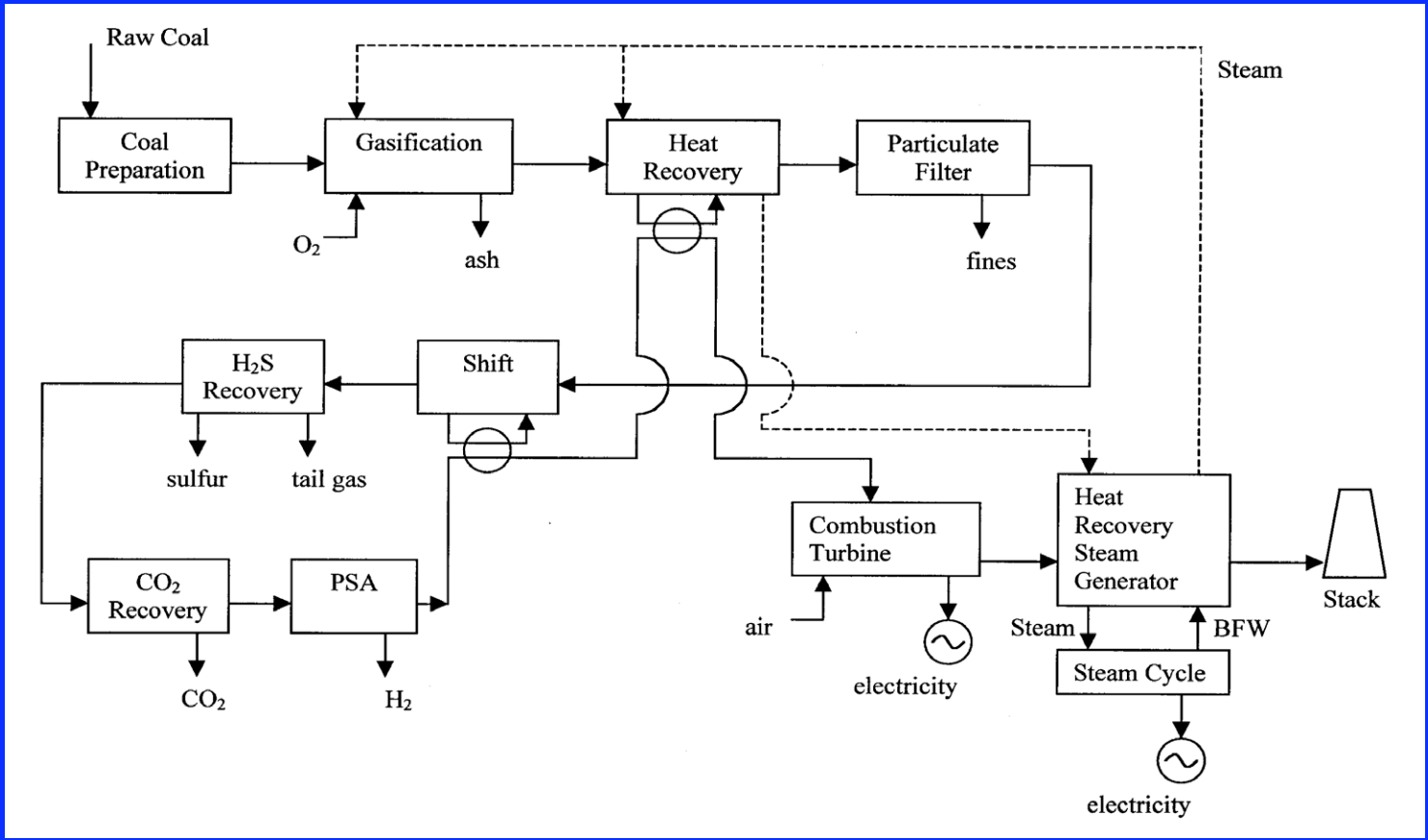

Major material flows for Gasification plant

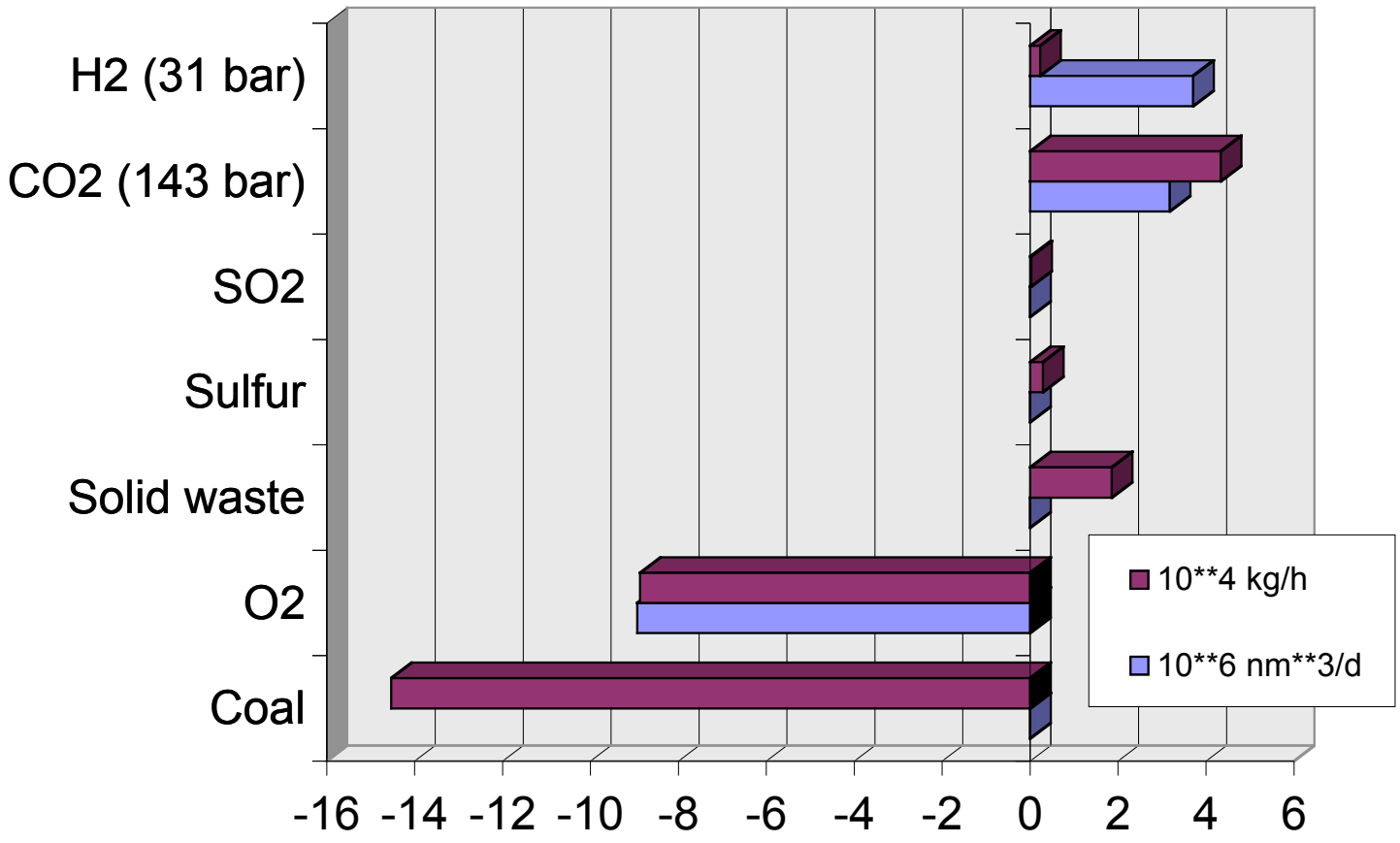

Shift precedes H_2S removal to yeild a high-H_2 synthesis gas

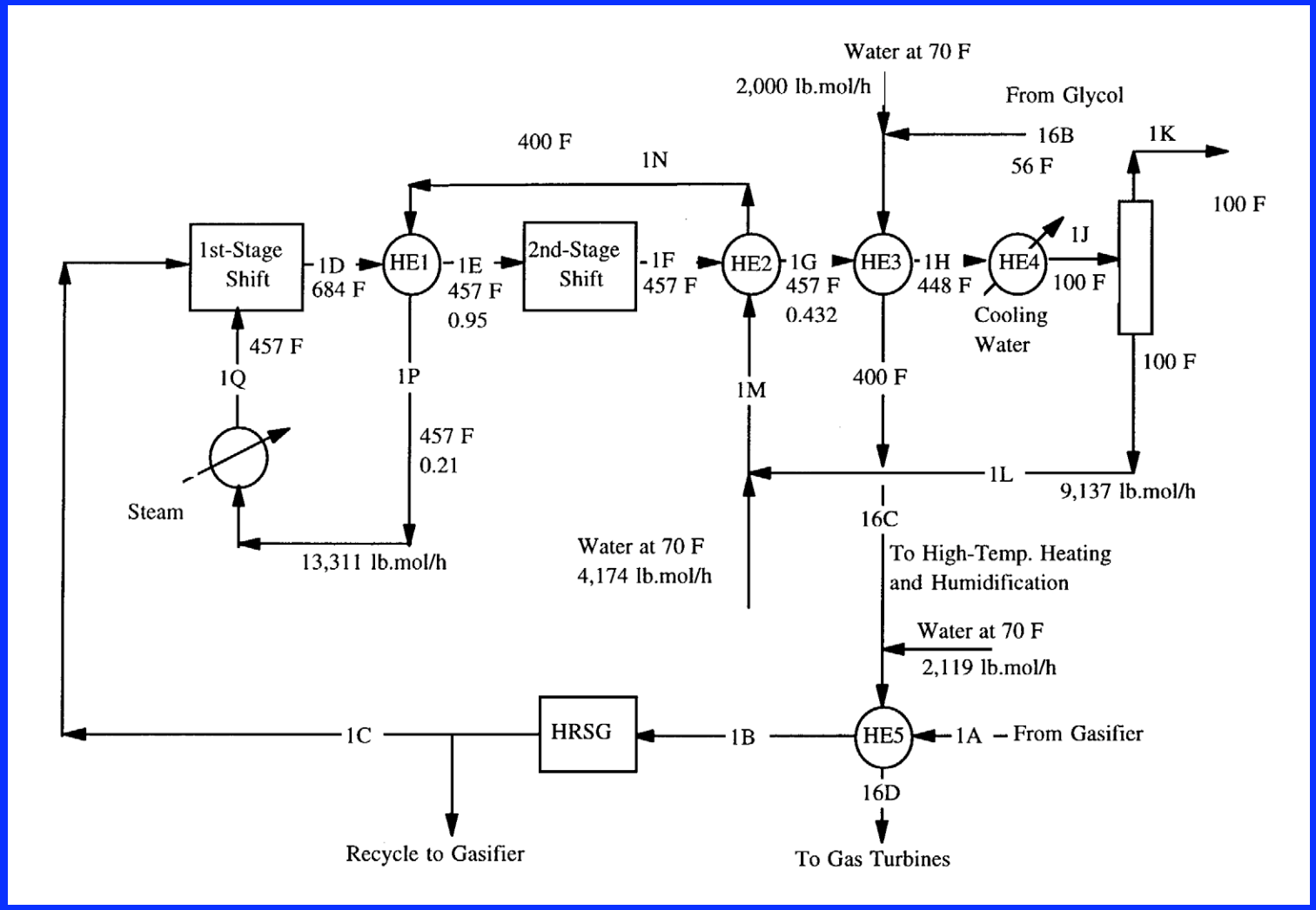

Gylcol recovery of H_2S to Claus-SCOT tail gas for sulfur

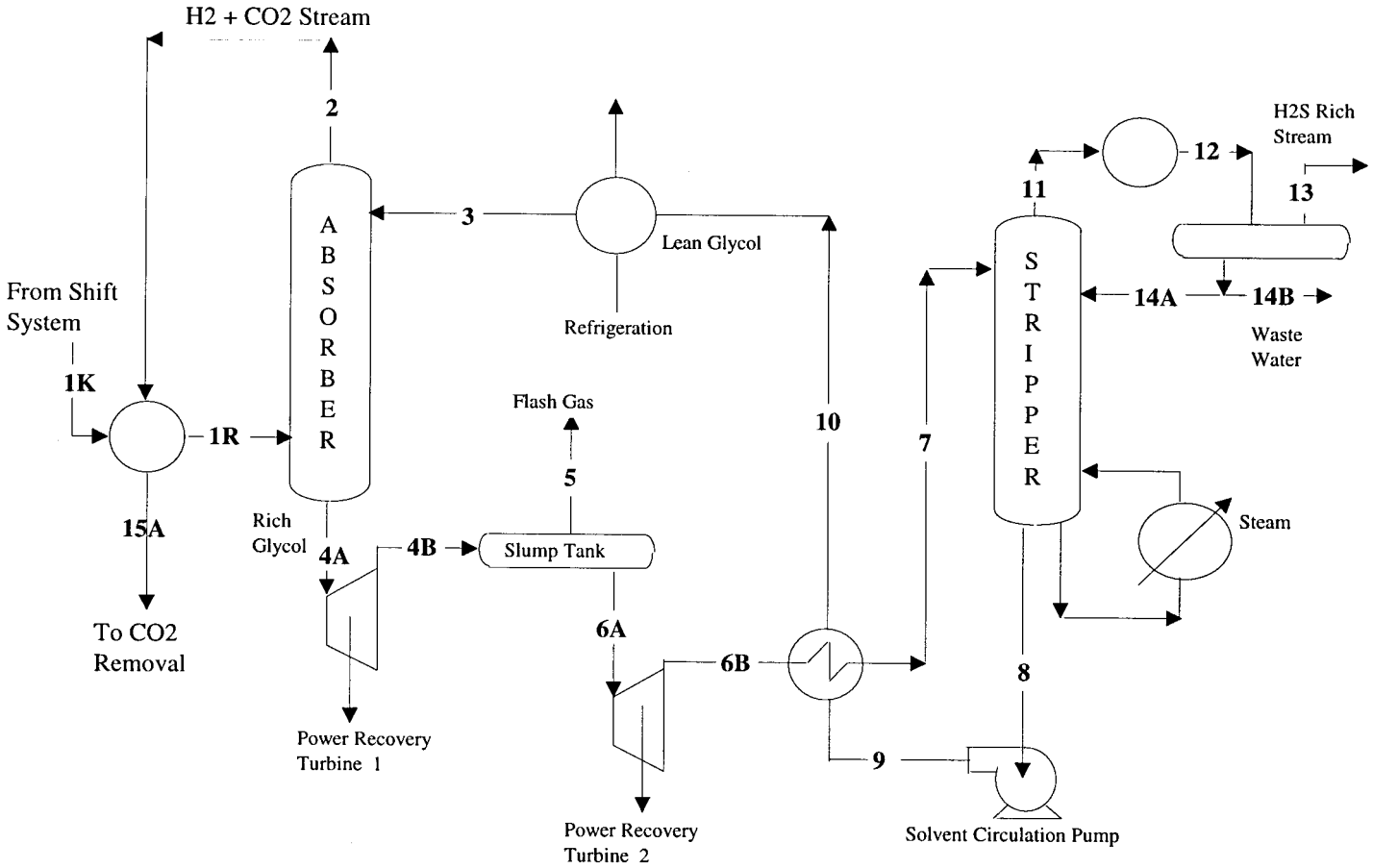

Gylcol CO_2 recovery to supercritical compression 143bar

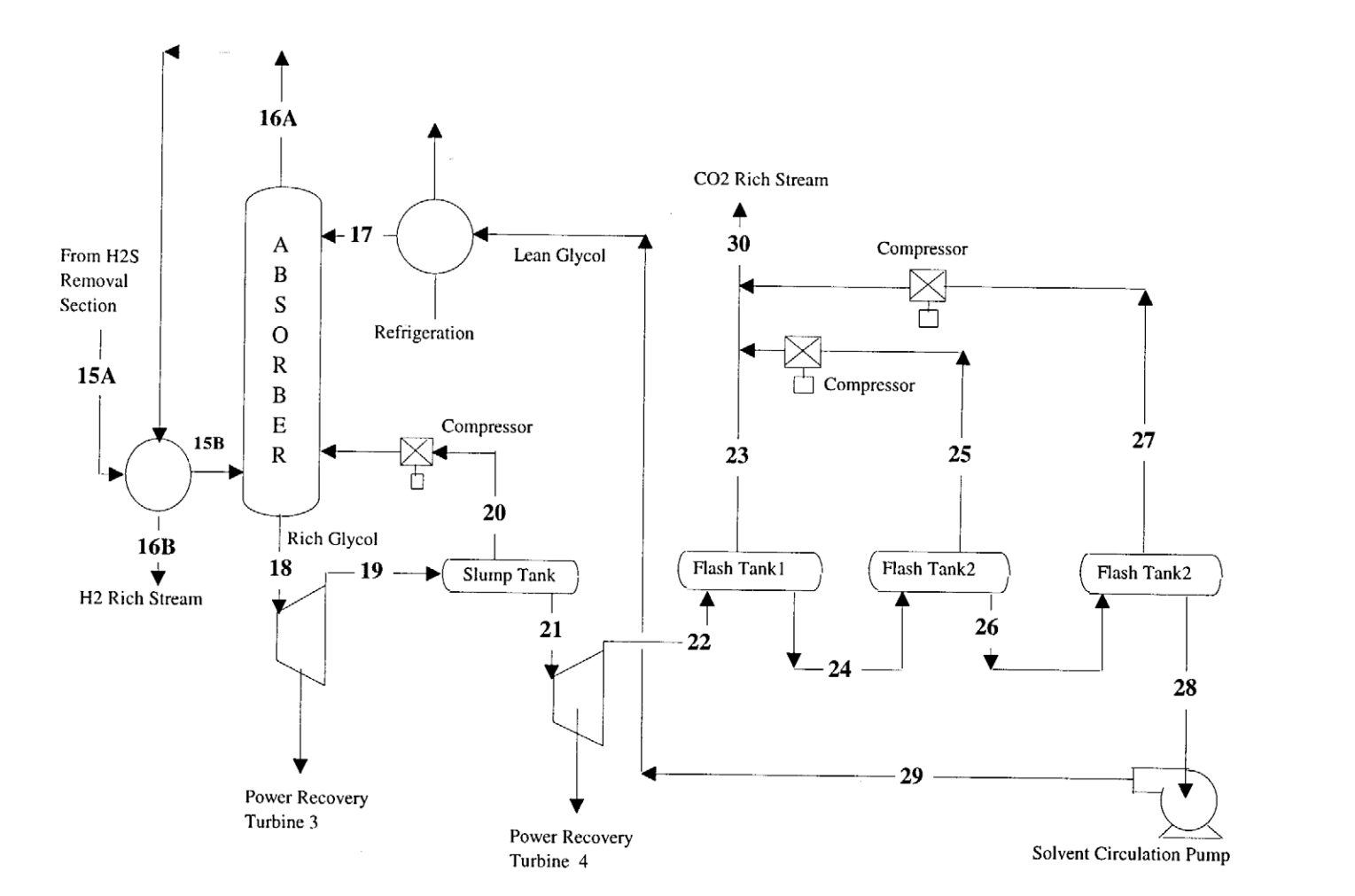

Pressure-swing adsorption (PSA) for H_2 purification to 99.999%

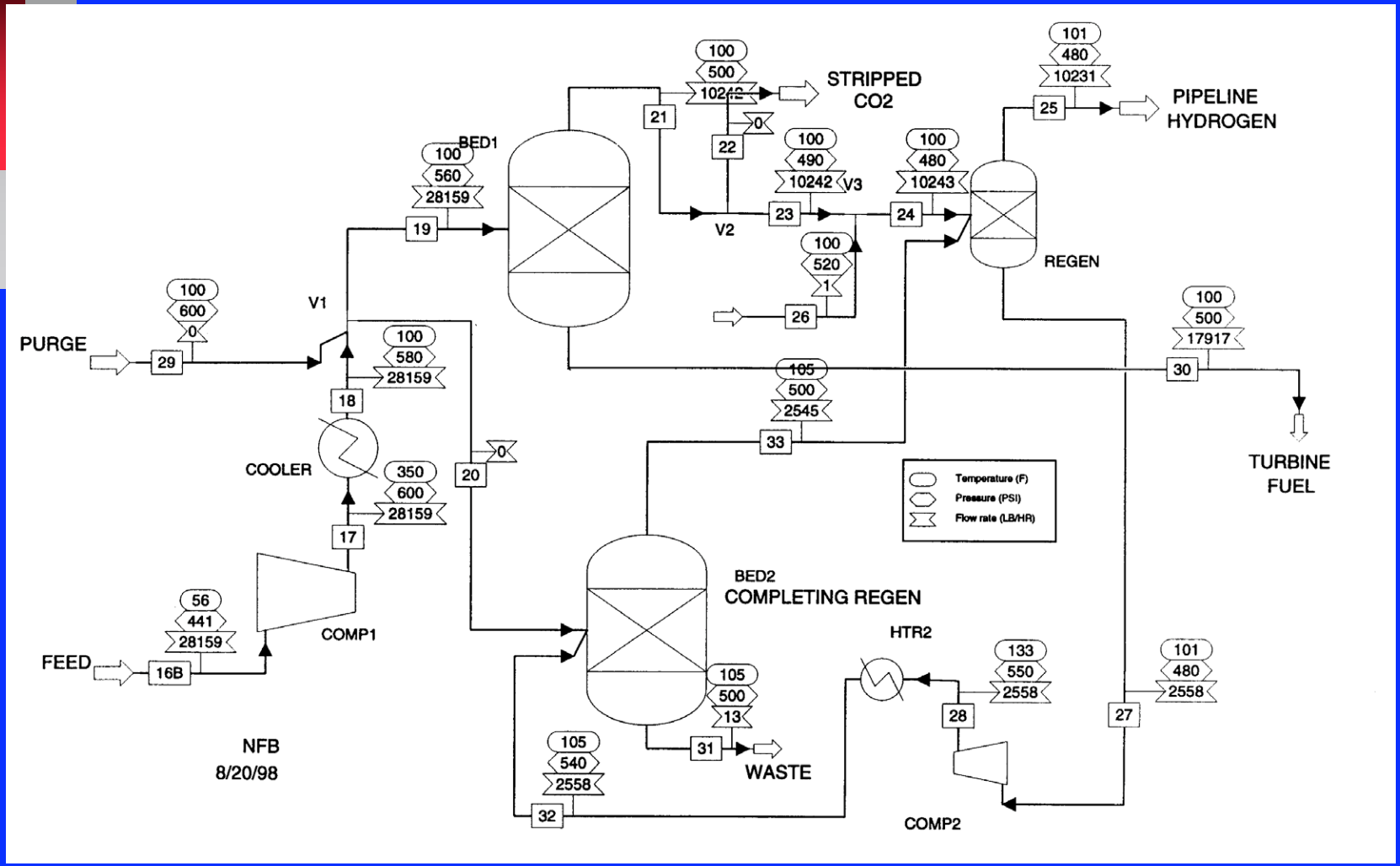

Power balance for Gasification plant excluding H_2

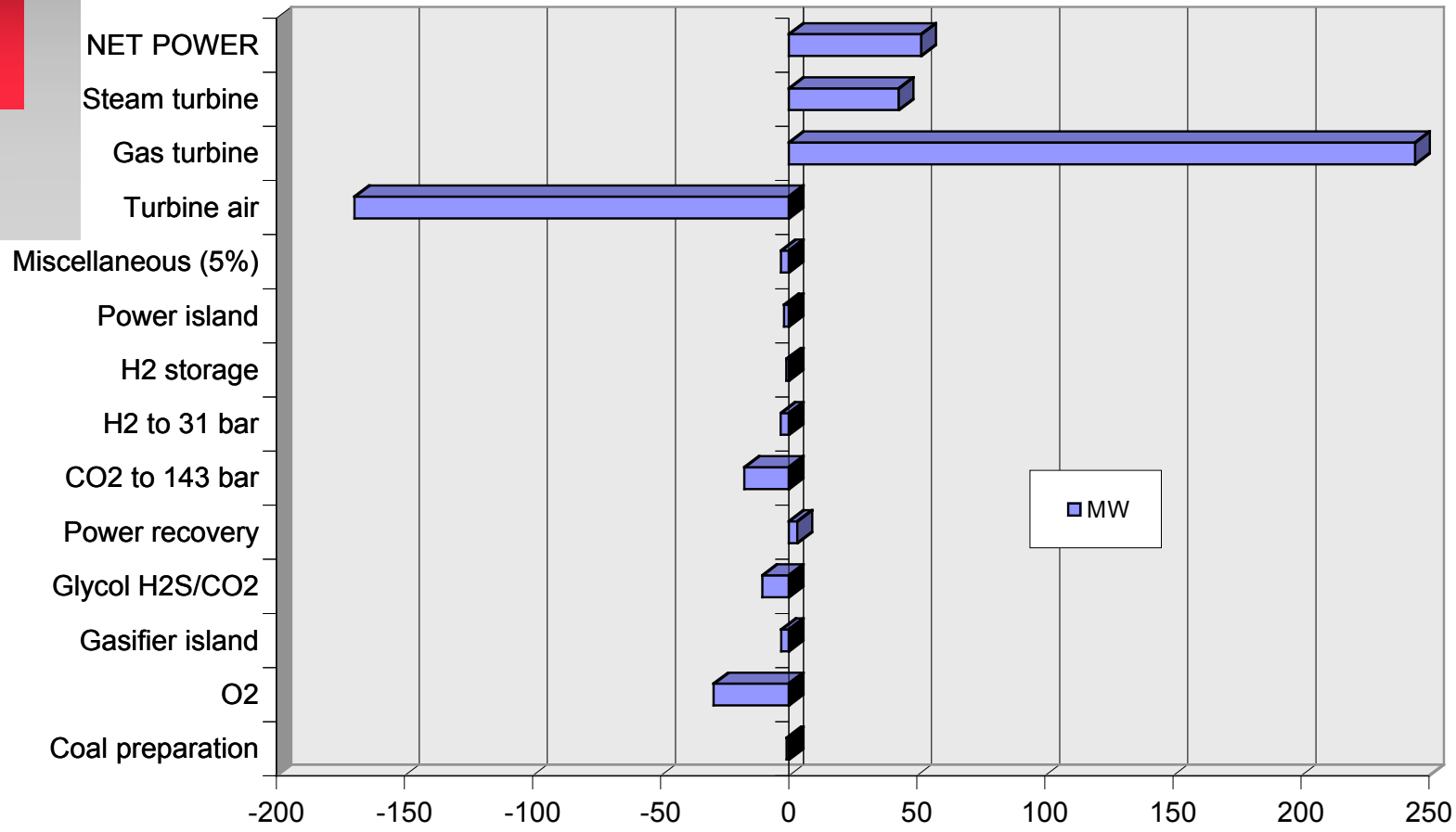

Hydrogen and electricity from Gasification plant

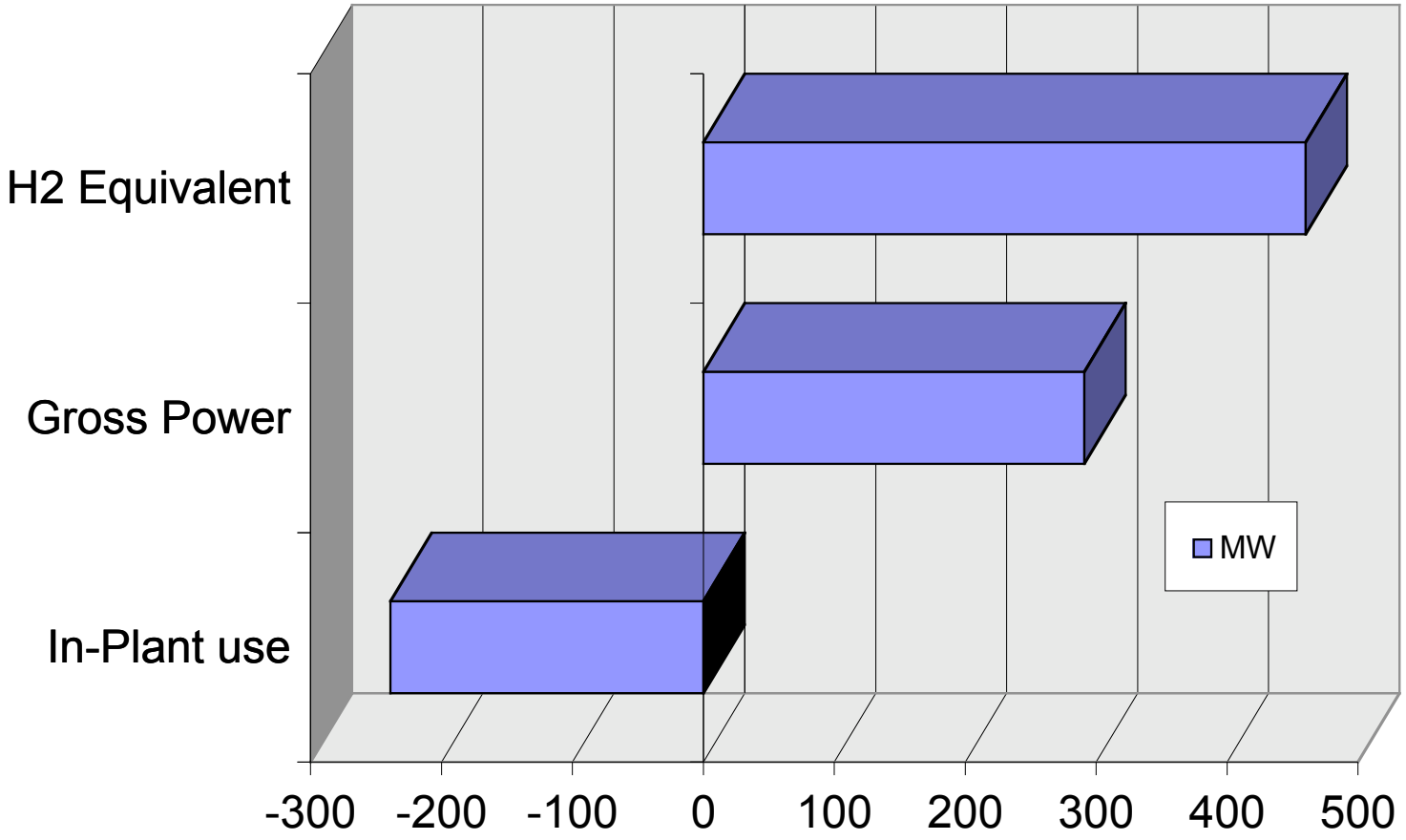

CO_2 supercritical pipelines are currently operated for EOR

Reservoir	Company	Approx. Start of Operation	Approx. Throughput (MMscf/day)	Pipe Diameter	Line Length (miles)	Operating Pressure (psi)
McElmo Dome, near Cortez, CO	Shell Pipeline Corp.	1984	700^{+}	30”	500	2600
Sheep Mountain, southern CO	ARCO Oil & Gas Co.	1983	500	20 - 24”	405	1200-2780
Bravo Dome, eastern New Mexico	Amoco Corp.	1985	400-700	20”	210	--

CO_2 for Enhanced Oil Recovery

- Purity: Not critical, dry, H_2S benefits EOR but should be limited
- Production still to be set
- Shipment: 500 km; 330 mm pipe at 143 bar
- Capacity factor: 95%
- Capital recovery: 12%
- Transmission linked to CO_2 infrastructure

H_2 pipelines use lower pressures & shorter runs than natural gas

Location	Company	Approx. Start of Operation	Pipe Material	Pipe Diameter	Network or Line Length (miles)	Operating Pressure (psi)
USA – Gulf Coast, TX	Air Products & Chemicals, Inc.	1970	var., including Sch. 40 steel	4" – 12"	140	50-800
	Praxair	1970's	--	8"	125	--
USA – Miss. River Corridor, LA	Air Products & Chemicals, Inc.	late 1980's	ASTM 106 steel	4" – 12"	60	500
	Praxair	1990's	--	--	34	--
Germany – Ruhr Valley	Chemische Werk Huls, AG	1938	seamless, SAE 1016 equiv.	6" – 12"	130	up to 360
France – NE	L'Air Liquide	1966	seamless, carbon steel	var., 4" typical	180	950 – 1450

Hydrogen product

- Purity: H_2 at 99.999%, 119.9 KJ/g (LHV)
- Production go for high purity product and send blowdown to turbines
- Shipment: 100 km; 343 mm pipe at 30 bar
- Capacity factor: 95%
- Capital recovery: 12%
- Transmission: 0.171 $/$10^3$ scf; 0.564 $/GJ

Advanced H_2 Turbine Cycle

Bannister, R.L., J.Eng. of Gas Turbines and Power, ASME, 120:276, Apr.1998

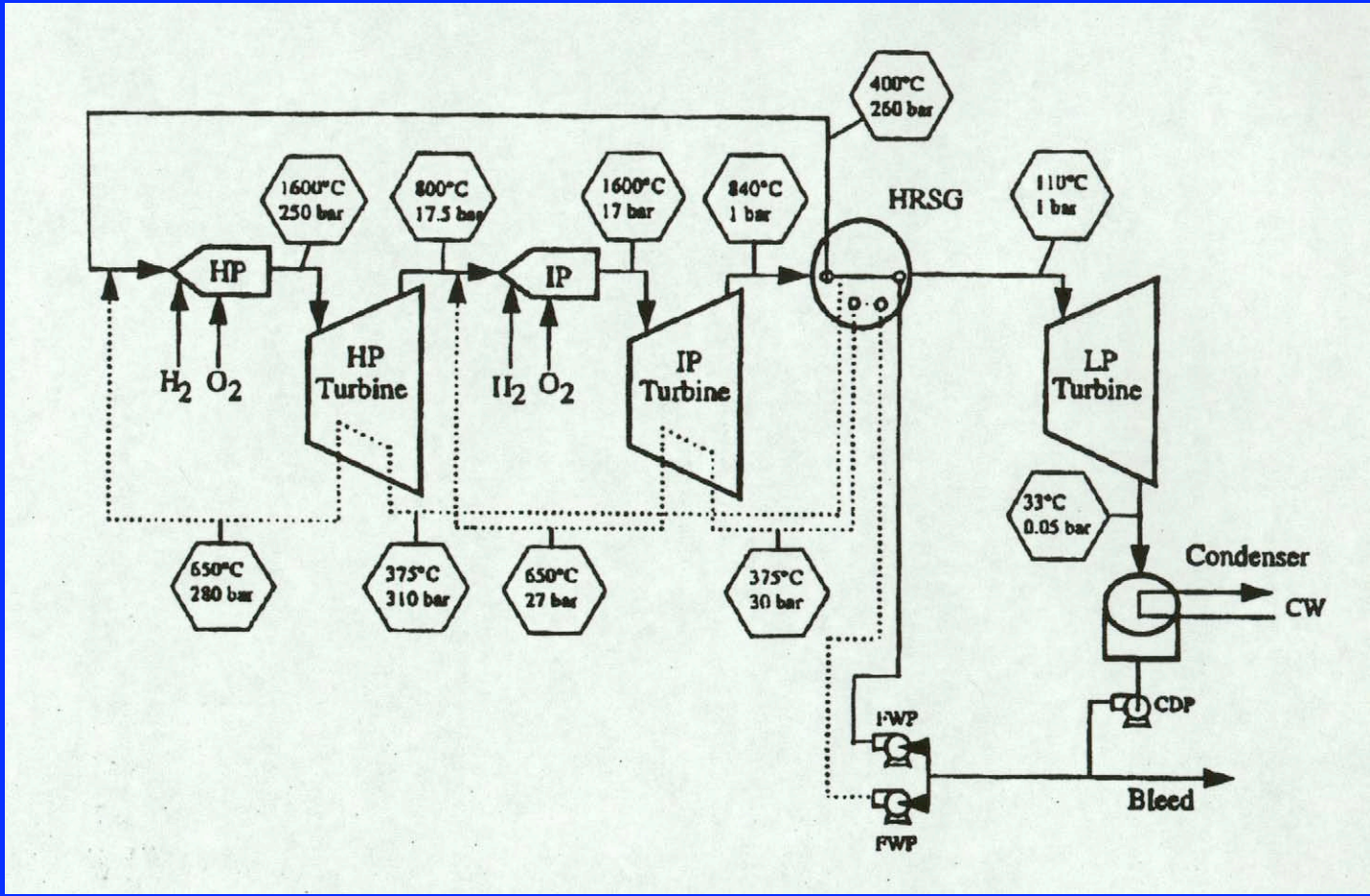

High-efficiency H_2 turbine goals

Bannister, R.L., J.Eng. of Gas Turbines and Power, ASME, 120:276, Apr.1998

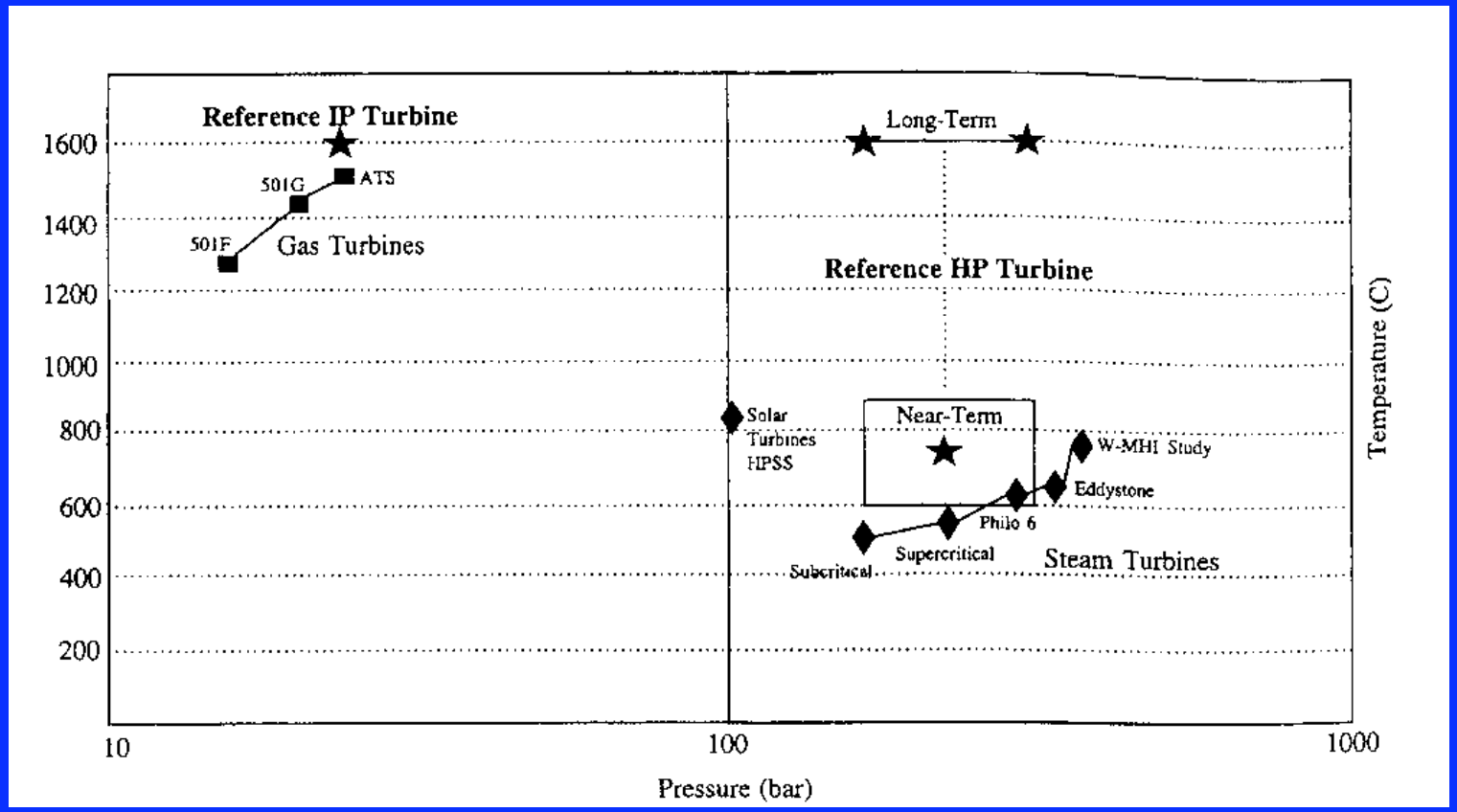

O_2 from pressure vacuum swing absorption

Selin, R., Scandanavian J. of Metallurgy, 27:88 (1998)

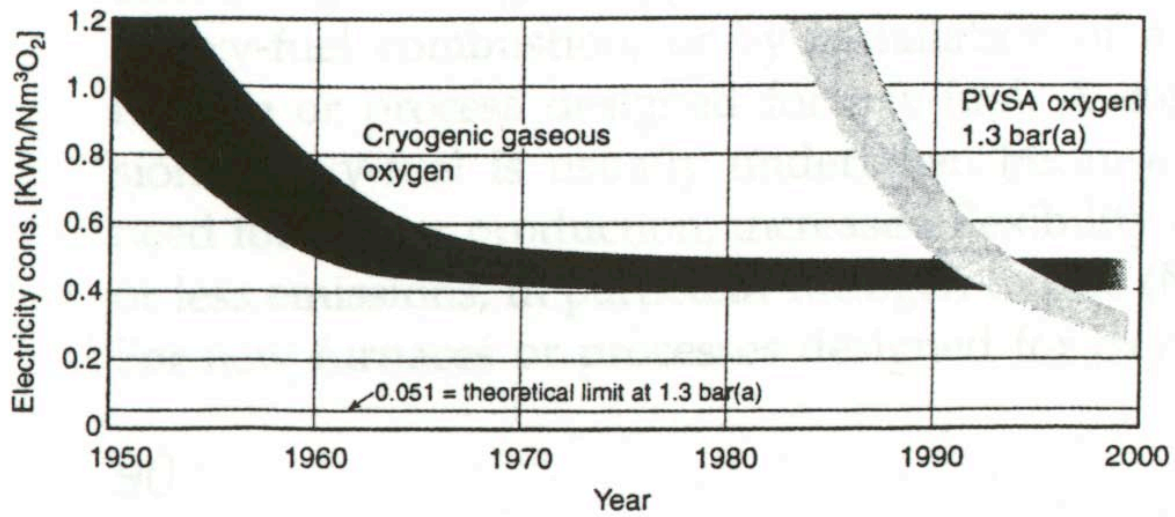

Fig. 1. Development of electricity consumption for the production of gaseous oxygen.

Electricity: O_2-blown KRW IGCC all values for full-energy cycle

- No CO_2 recovery:
  396-MW full-cycle at 0.83 $kgCO_2/kWh$
- With CO_2 recovery:
  366-MW full-cycle at 0.20 $kgCO_2/kWh$
- With CO_2 and H_2 recovery to fuel cells:
  - 344-MW full-cycle at 0.22 $kgCO_2/kWh$
    52-MW busbar and 298-MW solid-oxide FC
  - 377-MW full-cycle at 0.20 $kgCO_2/kWh$
    52-MW busbar and 332-MW alkaline FC

Equivalent CO_2 greenhouse emissions 396 MW net-cycle

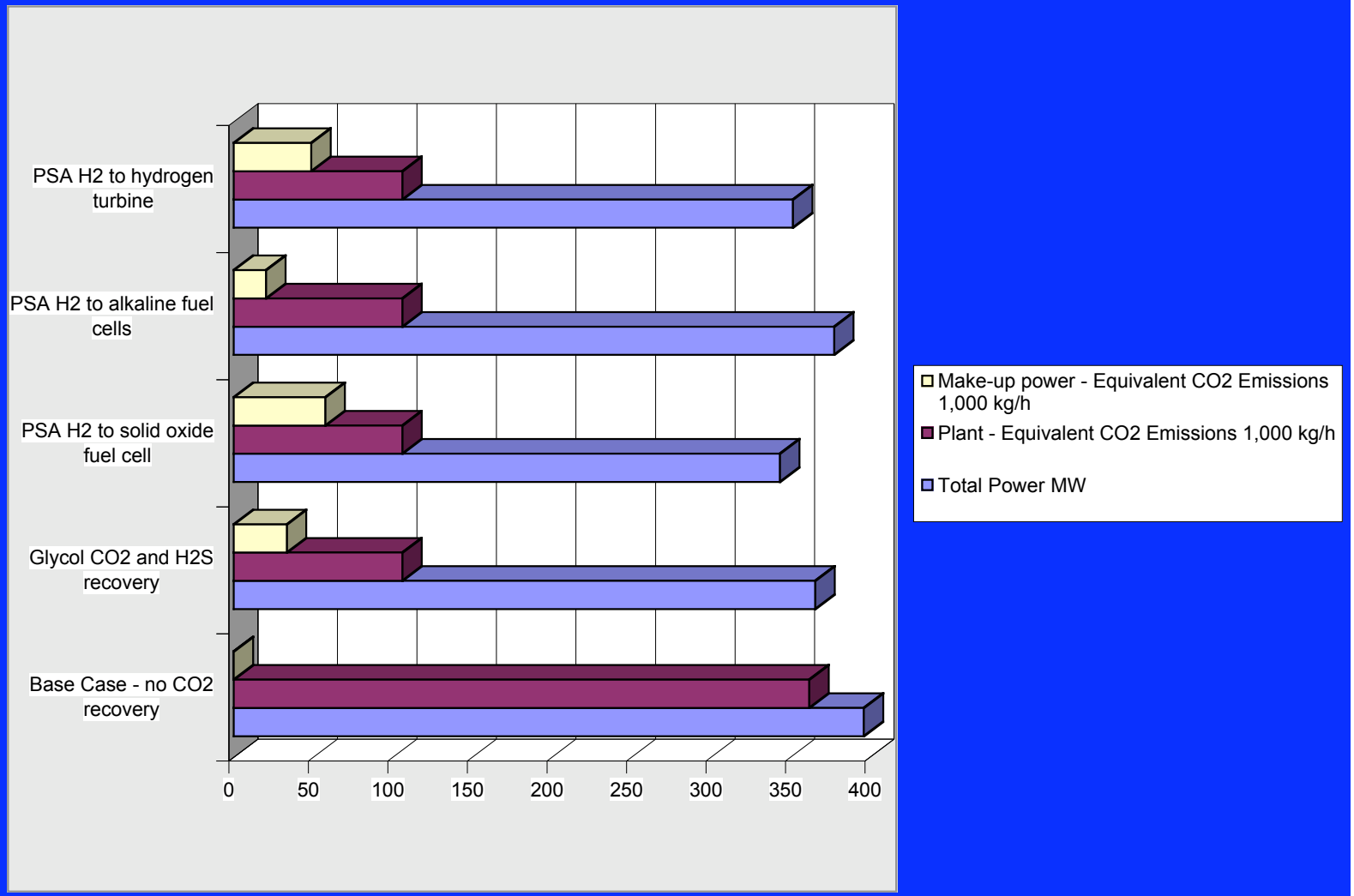

Conclusions: IGCC plant

- CO_2 as a supercritical product (143 bar) can be recovered from coal gasification. Where there is an Enhanced Oil Recovery market, this is economical. The need for high pipeline-utilization is critical.
- Hydrogen can be recovered at high purity (99.999%) for sale from coal gasification, the need for high pipeline-utilization is critical. Pressures of 35 bar are optimal.

Status – June 2000

- ASPEN 10.1 upgrade on IGCC programs is now operational
- Linkage with SAIC has been established
- Linkage with Equation of State modeling community for ASPEN has been established
- Process economics will be treated in a more detailed manner
- Optimization of Shift integration has begun

Conclusions: H_2 use

- Conversion efficiencies need to approach 77% to match the Base Case output:
  - Solid-oxide fuel cell efficiencies are 53-58%
  - Alkaline fuel cell efficiencies near 70%
- Hydrogen can be delivered as a commodity